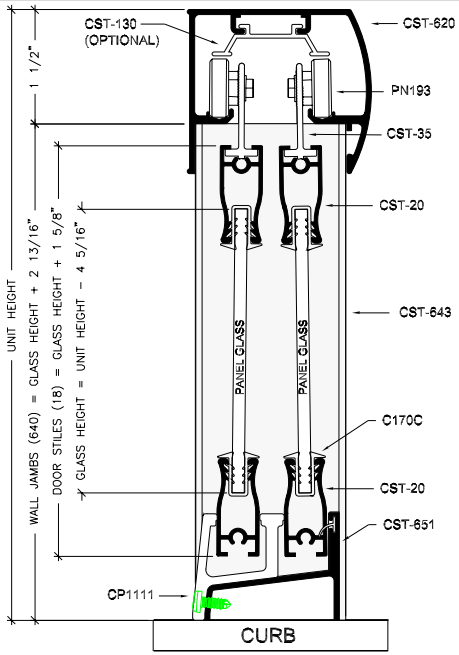

Vertical Cross Section

NOTES:

1. FORMULAS ARE BASED ON A MINIMUM WIDTH OPENING. WHEN MEASURING OPENING WIDTHS, ALWAYS CHECK FOR OUT OF PLUMB WALL CONDITIONS.

*** 2. FORMULAS FOR GLASS WIDTHS SHOWN WILL YIELD A "PERFECT OVERLAP". THE TERM DESCRIBES THE OVERLAPPING CONDITION OF THE TWO PANELS WHEN CLOSED (PANEL STILES ARE ALIGNED WHEN LOOKED AT STRAIGHT ON).

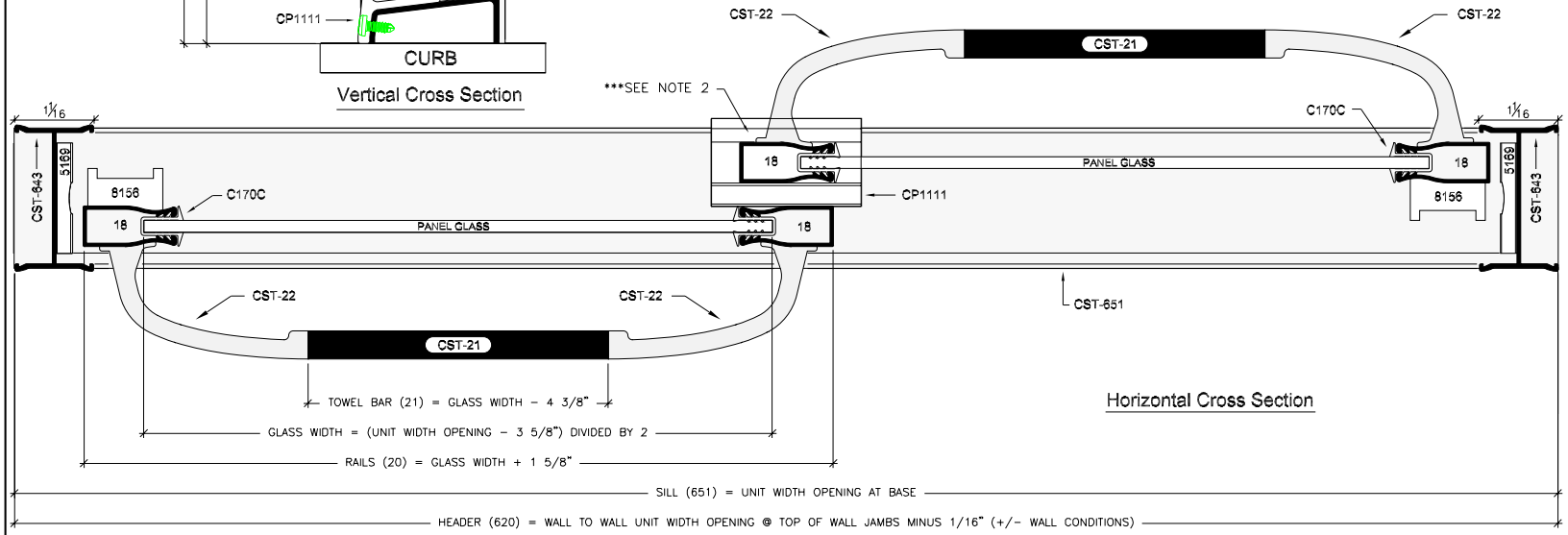

Horizontal Cross Section

Series	Unit Configuration
PARAGON	Framed Bypass Door

Coastal Industries Inc.